National 5 Physics

Key Areas of Revision

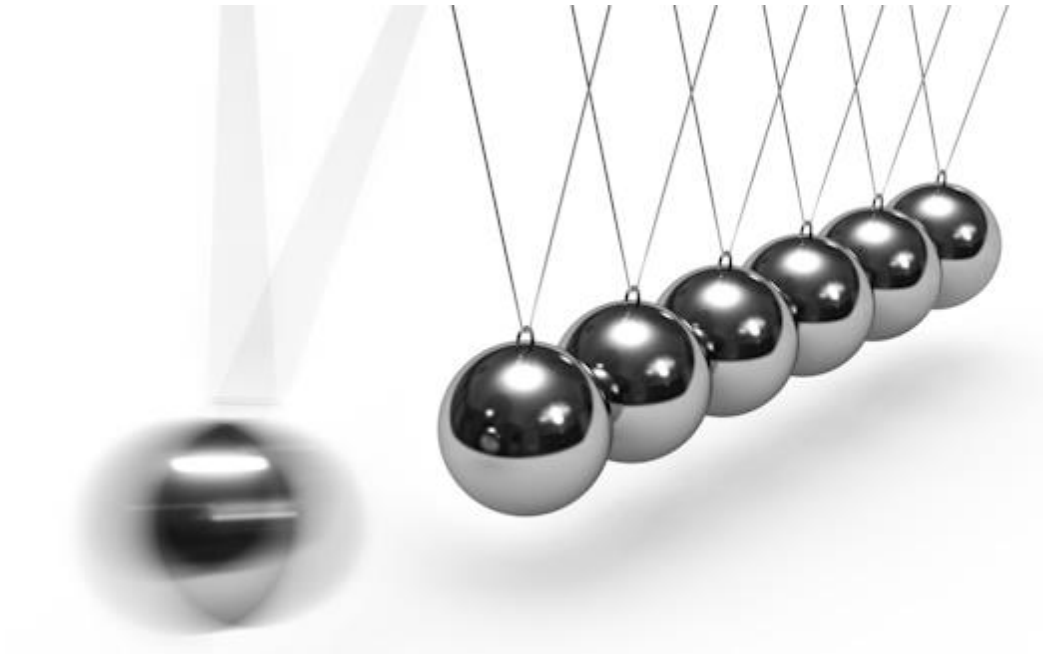

Contents

Key Revision Areas Help Sheet

Using the Kinetic Model - Gas Laws

T v freq. F A V P as P =F/A

- Constant Variable
- Changing Variable
- f and F
- Equation

Transistors

- Thermistor or LDR (TURD or LURD)
- Effect on Transistor's Voltage
- Current through Transistor
- Extra Appliance

Heat Energy

- $E_H = ml$ → changing state, no change in temperature
- $E_H = cm\Delta T$ → changing temperature, no change in state

Using all the Data - Gas Laws

- PV/T = constant (*number*) → one of the three variables P, V or T will not change so score this one out straight away
- Do calculations for all of the information in the table to determine the "constant"
- This may be four or five separate calculations depending on how much data you have been given
- If the number (constant) is the same or extremely similar in all cases then there is a relationship

Resistor Ratios

- Determine the **total** resistance then use this with the total voltage to calculate the current (which is constant in series)
- Use the current and the resistance of **one** of the resistors (the one you're trying to find) to calculate the voltage across it.

Vector Diagrams

- **Always** join vectors tip to tail
- Determine the length of the resultant vector
- Measure the corner angle with **no** arrow heads
- Make the angle into a bearing

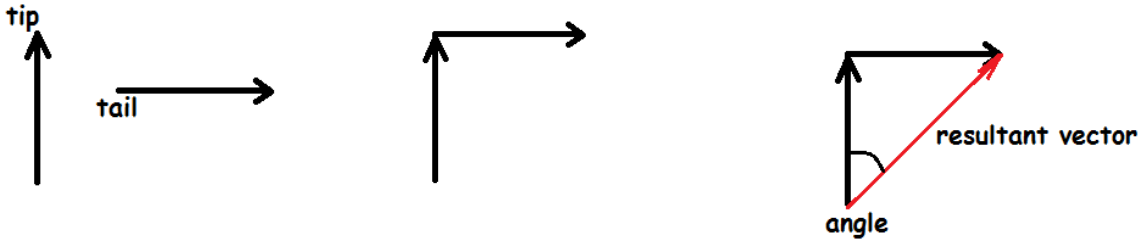

Reflection of Sound (Echo)

- Will be worth 4 marks
- Sound will hit off of something then travel back to the source that made the sound
- Time to hit off the thing is **half** the total time
- Example, if you shout into a cave and hear your shout 10 seconds later then the sound waves travelled for 5 seconds to reach the end of the cave then another 5 seconds to return to your ears. Question: "A boy stands on a beach and sees a cliff ahead of him. He whistles and hears the sound return to him after 3 seconds. Calculate how far away the cliff is from the boy. (*4 marks*)"

Projectiles

- Combination of horizontal and vertical motion
- Anything relating to horizontal motion use "d = vt" where v is the horizontal velocity
- Anything relating to vertical motion use "a = v-u/t" where v is the final vertical velocity, u is the initial vertical velocity (0 ms^{-1}) and a is the acceleration due to gravity (9.8 ms^{-2})

Prefixes (essential!)

k (kilo) = x1000 M(mega) = x1000,000 G(giga) = x1000,000,000

m (milli) = ÷1000 μ (micro) = ÷1000,000 n (nano) = ÷1000,000,000

National 5 Physics: Key Areas Revision Questions

Vector Diagrams

*1.*A hiker walks 14 km north then 10 km west in a time of 2 hours 40 minutes.

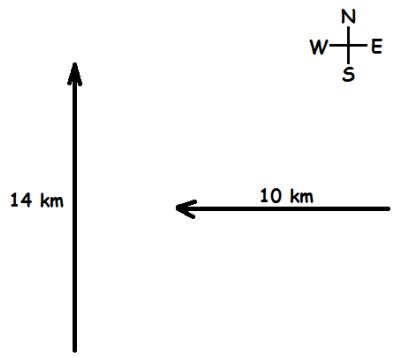

a) By scale drawing or otherwise, determine her displacement. **4**

b) Calculate her average speed. **3**

c) Calculate her average velocity. **3**

*2.*A pair of hockey players both attack the ball with their sticks. The ball has a mass of 200 g.

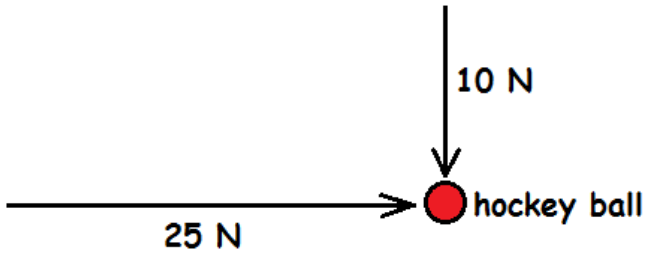

a) By scale drawing or otherwise, determine the resultant force acting on the ball. **4**

b) Calculate the acceleration of the ball. **3**

*3.*Two men have tied ropes around a box of mass 5 kg. They both pull in different directions. One pulls north with a force of 10 N and the other pulls east with a force of 12 N.

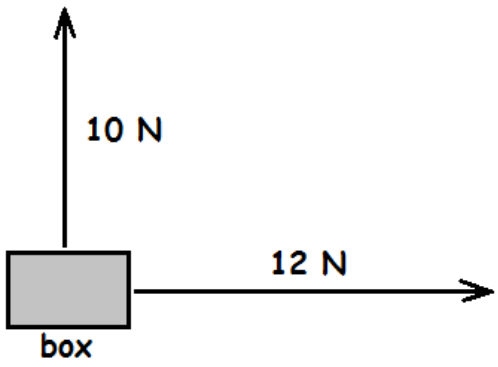

a) By scale drawing or otherwise,

i) determine the magnitude of the resultant force acting on the box. **2**

ii) determine the direction of the resultant force acting of the box. **2**

b) Calculate the acceleration of the box. **3**

Gas Laws

4. A balloon is attached to a barometer (which measures pressure). The volume of the balloon is then reduced by squeezing it to see how this affects the pressure. During the experiment the temperature of the gas in the balloon remains constant. The results for the experiment are shown below.

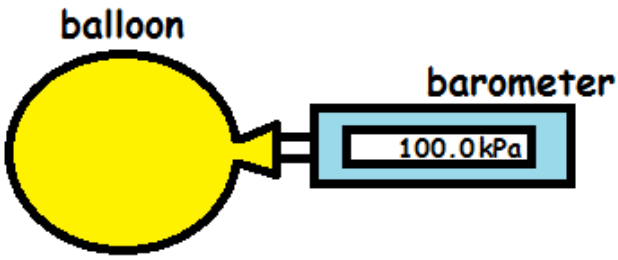

Pressure/kPa	100	110	120	130
Volume/cm^3	40	36.4	33.3	30.8

a) Using **all** of the data, determine if there is a relationship between the volume and pressure of the gas. **2**

b) Using the kinetic model, explain how a decrease in volume affects the pressure.**3**

5. A rigid container filled with gas is attached to a barometer. A Bunsen burner is placed underneath the container so that the temperature of the gas inside can be altered and the effect on the pressure can be assessed. The volume of the container remains constant during the experiment.

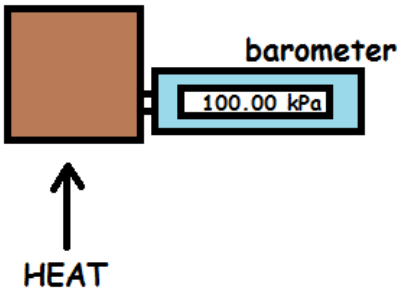

Pressure/kPa	100	105	110	115
Temperature/^{o}C	20	35	49	64
Temperature/K	293	308	322	337

a) Using all of the **relevant** data, determine the relationship between temperature and pressure of the gas. **2**

b) Using the kinetic model, explain how an increase in temperature affects the pressure. **3**

6. A balloon is submerged in a basin of water. The temperature of the water starts as boiling but is eventually cooled to room temperature (20°C) which decreases the volume of the gas inside the balloon. During the experiment the pressure of the gas inside the balloon remains constant. The results of the experiment are displayed in the table below.

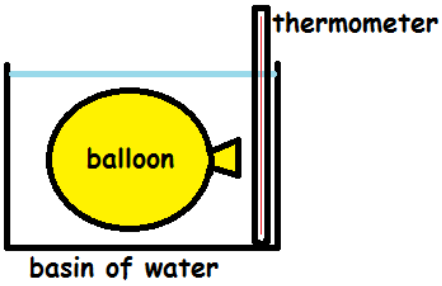

Volume/cm^3	500	472	446	420	393
Temp./^{o}C	100	80	60	40	20
Temp./K	373	353	333	313	293

a) Using all of the **relevant** data, determine the relationship between T and V. **2**

b) Using the kinetic model, explain what happens to volume as temp. decreases. **3**

Reflection of Sound

7. A boy is on holiday in the Canary Islands. His family decide to visit an old, extinct volcano where you can climb into the mouth of it. The boy whistles and hears the echo of the whistle 1.5 seconds later.

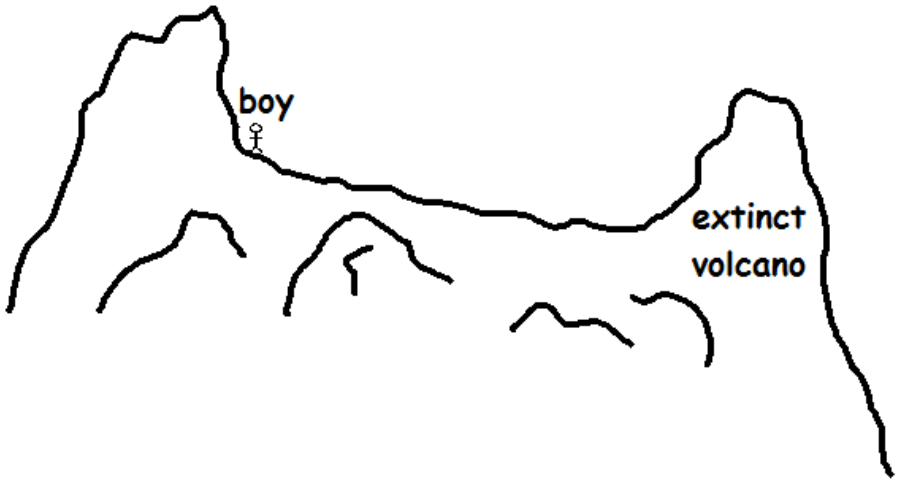

a) Calculate the length from one side of the volcano to the other. **4**

b) Are sound waves longitudinal or transverse? **1**

c) Explain the difference between longitudinal and transverse waves. **2**

8. A boat out at sea sounds its horn. The noise from the horn hits off a cliff and is heard sometime later.

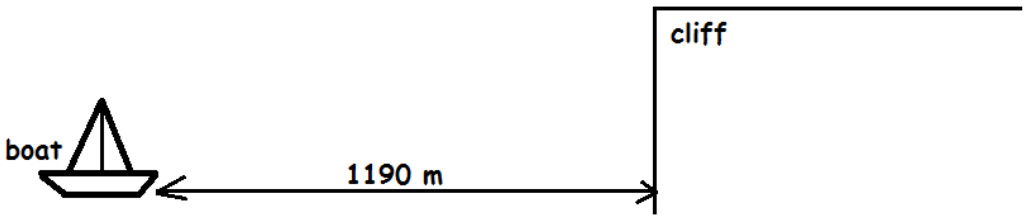

a) Calculate the time it takes from the moment the horn is sounded until the moment the echo is heard. **4**

b) A second horn is sounded on the boat which has a higher frequency that the first horn. Will its echo reach the boat in a longer, lesser or the same time as before? Explain your answer. **2**

*9.*A group of fisherman send an ultrasound wave to the sea bed from their boat. They do this to determine if it is deep enough to cast their nets. The ultrasound hits off the sea bed and is detected by the boat again in 3.6 seconds.

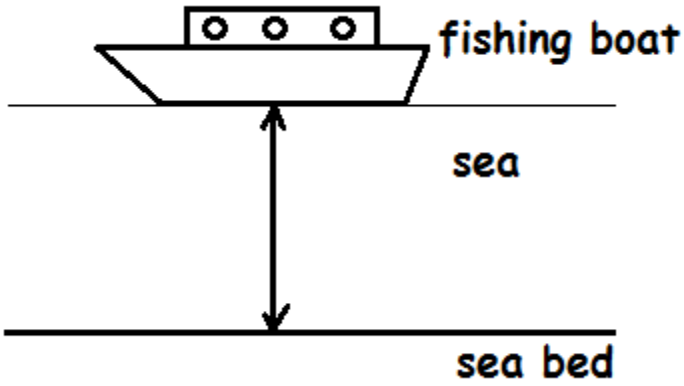

a) State the speed of sound in water. **1**

b) Calculate the depth of the sea. **4**

c) The ultrasound has a frequency of 25 kHz. Calculate the wavelength of the sound **in the sea**. **3**

Transistors

10. A man has the following circuit set up as a security system when he is away on holiday. If the sunlight outside is too dim (like at twilight) then the electric curtains will close. The resistance of the resistor is 20kΩ and at 7pm the resistance across the LDR is 4 kΩ.

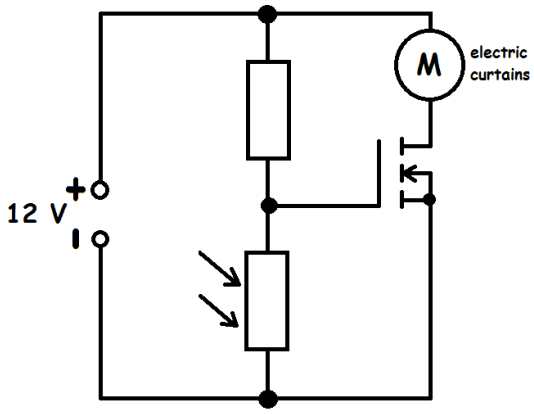

a) Calculate the voltage across the LDR at 7pm. **4**

b) Explain how this circuit would operate to close the curtains when it's too dark. **3**

*11.*In an office if the temperature gets too high then an electric fan will automatically switch on due to the following circuit. The resistance of the resistor is 500 Ω and when the temperature in the room is 28°C the resistance of the thermistor is 4kΩ.

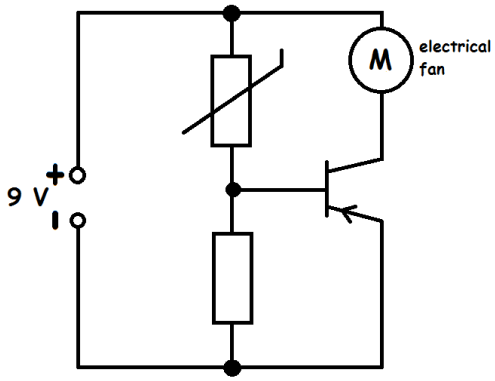

a) Calculate the voltage across the resistor when the temperature in the room is 28°C. **4**

b) Explain how the circuit would operate to turn the fan on when it's too hot. **3**

12. In a school gym hall the following circuit allows a powerful heater to be turned on if the temperature in the hall drops below a certain level. The resistance of the resistor is 2.7kΩ and when the hall is at a temperature of 10°C the resistance of the thermistor is 300 Ω.

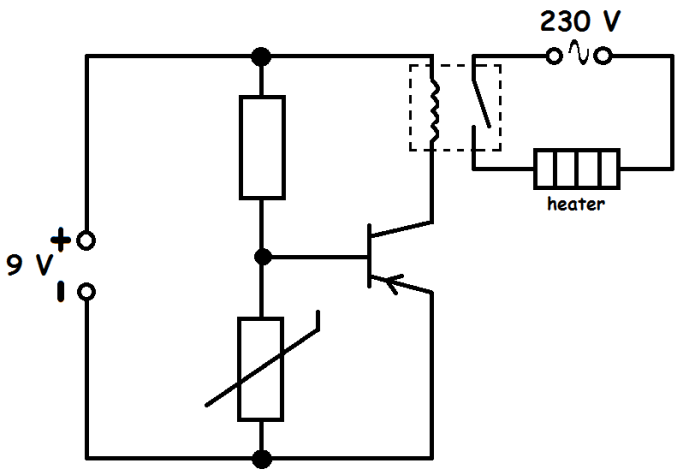

a) Calculate the voltage across the thermistor when the hall temp. is 10°C. **4**

b) Explain how this circuit would work to turn the heater on if the temperature was too low. **3**

Half-Life

13. Three different radioactive sources were measured for a period and then graphs were plotted to show what would happen to their activity over time.

In each of the three examples, determine the half-life of the source. **(3 x 2)**

a)

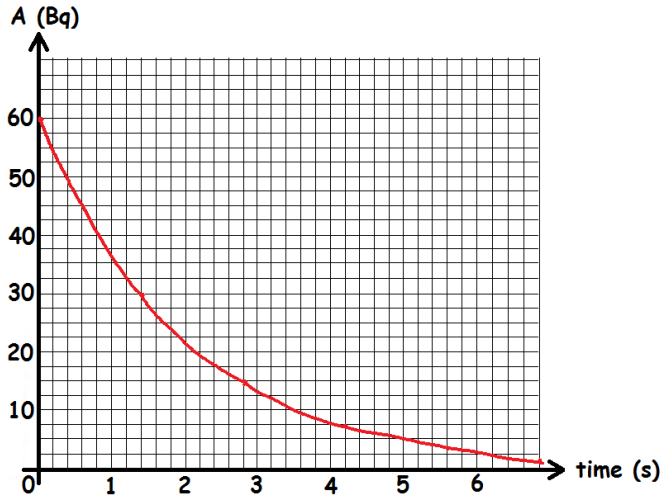

b)

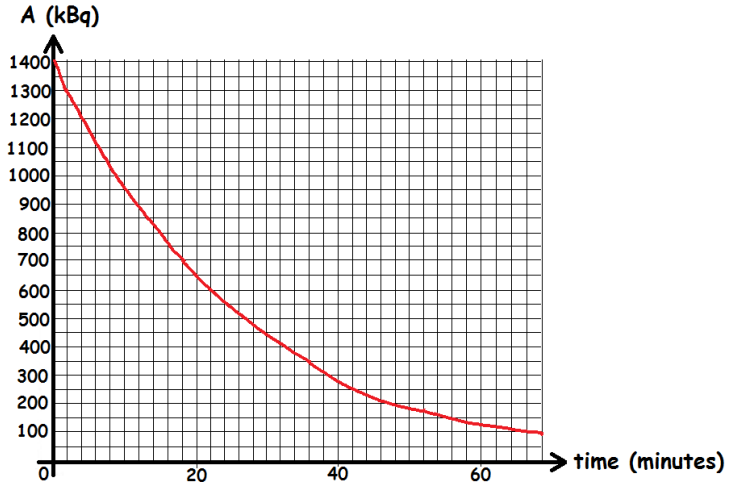

c)

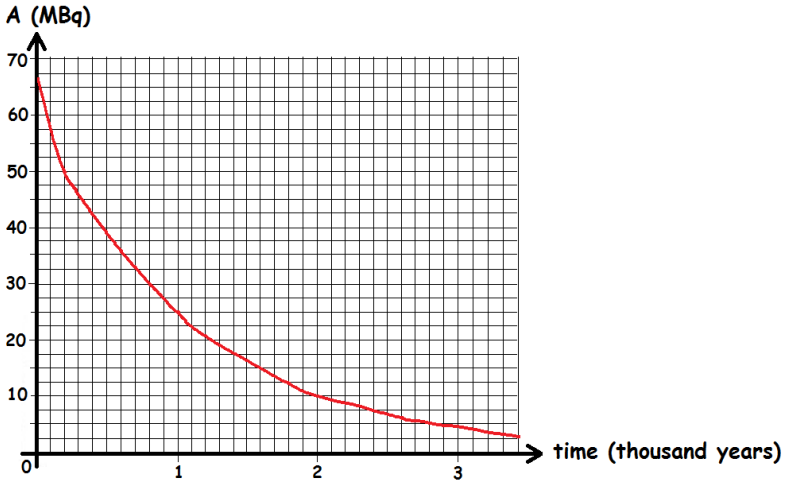

Projectiles

14. A girl strikes a golf ball off the edge of a cliff with a horizontal velocity of 25 ms^{-1}. The ball lands 4 seconds later.

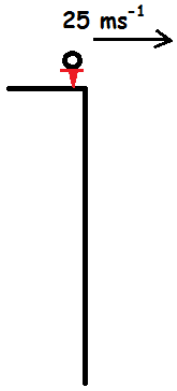

a) Calculate the range of the golf ball. **3**

b) Calculate the final vertical velocity of the golf ball. **3**

c) Sketch a v-t graph of the vertical motion of the golf ball. Numerical values are required on both axes. **2**

d) Using the graph, calculate the height of the cliff. **3**

15. A boy boots a football off the top of high rises with a horizontal velocity of 10 ms^{-1}. The ball hits the ground 2.7 seconds later.

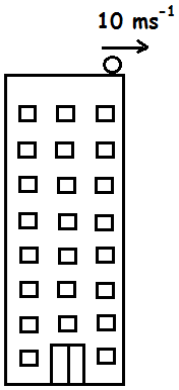

a) Calculate how far away the ball lands from the high rises. **3**

b) Calculate the final vertical velocity of the ball (just before it hits the ground). **3**

c) If the ball was dropped off the top of the high rises, would the time taken to reach the ground be more, less or the same as when kicked off. Explain your answer. **2**

16. A foolish man enjoys a bit of pier diving. He runs straight off the end of the pier at a horizontal velocity of 5 $ms^{-1}$and hits the water 1.2 seconds later.

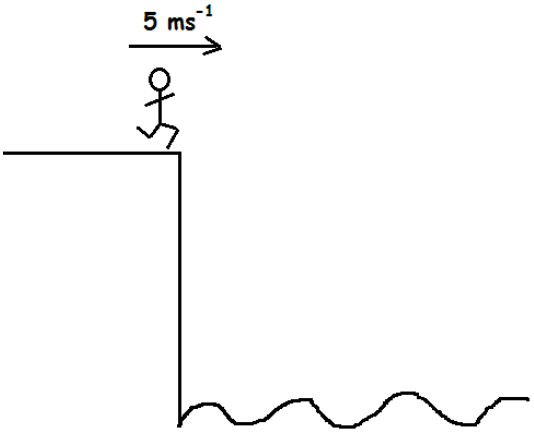

a) Calculate how far away he lands from the pier. **3**

b) Calculate his final vertical velocity. **3**

c) Sketch a v-t graph of the man's horizontal motion after running off. Numerical values are required on both axes. **2**

d) Using your graph, calculate the height of the pier. **3**

Resistor Ratios

17.

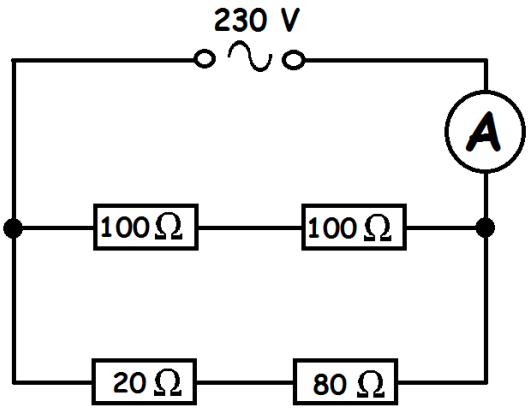

a) Calculate the voltage across the 20 Ω resistor. **4**

b) Calculate the total resistance in this circuit. **3**

c) Calculate the reading on the ammeter. **3**

d) The bottom two resistors are removed from the circuit. Explain the effect this would have on the reading on the ammeter. **2**

18. In the following circuit the resistance of the thermistor is 5 kΩ and the current passing through it is 2.5 mA.

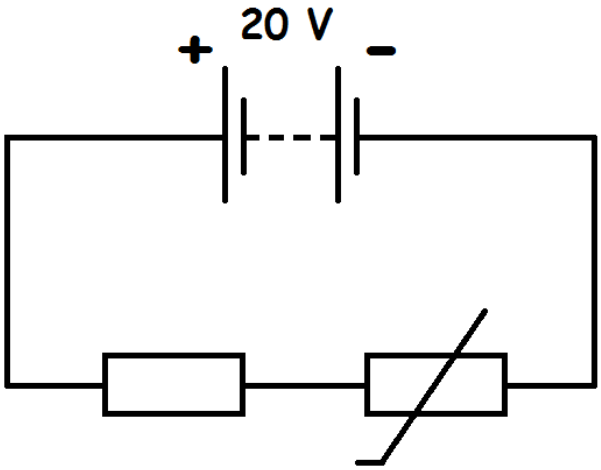

a) Calculate the voltage across the resistor. **4**

b) Explain what happens to the voltage across the resistor as the temperature across the thermistor increases. You must justify your answer. **2**

19. The resistance across the LDR is 800 Ω and the current passing through it is 7.5 mA.

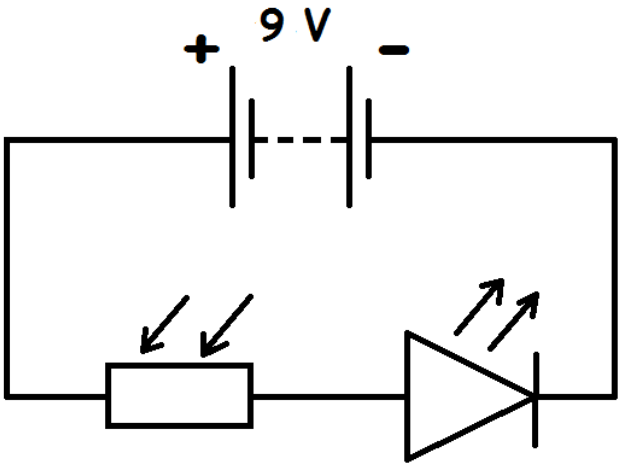

a) Calculate the voltage across the LED. **4**

b) As the light level across the LDR decreases, explain what happens to the brightness of the LED. You must justify your answer. **2**

Heat Energy

20. A tub of ice cream is pulled out of the freezer and sat in front of a window which the sun shines through. The mass of the ice cream is 0.3 kg. The temperature of the ice cream quickly changes from -5°C to 0°C.

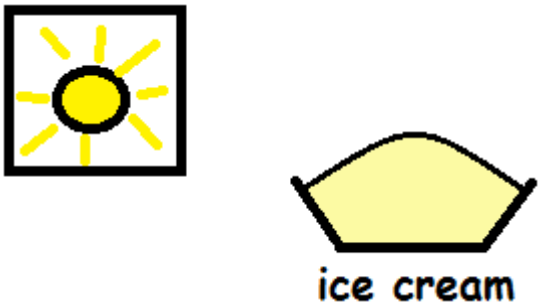

a) Calculate the heat energy the ice cream absorbs as its temperature increases. (The specific heat capacity of ice cream = 2100 $Jkg^{-1}{}^{o}C^{-1}$) **3**

At 0°C the ice cream starts to melt. After being left to melt for a while the tub is then **drained** so that there is only 0.1 kg of solid ice cream left inside the tub.

b) Calculate how much heat energy was required to change the state of the amount of ice cream that melted. (The latent heat of fusion for ice cream = $2.34 \times 10^5 Jkg^{-1}$) **3**

21. A beaker, containing 600 g of water, is placed on top of a Bunsen burner and its temperature is increased from 25°C to 100°C.

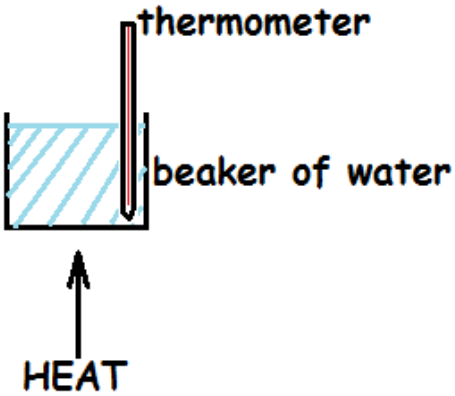

a) Calculate the heat energy supplied by the Bunsen to warm up the water. **3**

The water then starts turning into steam. After a while the Bunsen is turned off and the mass of remaining water is found to be 250 g.

b) Calculate the heat energy that was used to change the water into steam. **3**

*22.*A rigid gas canister of volume 1.81 m^3 has a gas inside of mass 1.2 kg. Early in the morning the gas inside is at a temperature of 5^oC and the pressure of the gas is 1.4×10^5Pa.However, as the day wears on the temperature of the gas increases to 30^oC. The specific heat capacity of the gas is 2200 $Jkg^{-1}{}^oC^{-1}$.

a) Calculate the heat energy absorbed by the gas by the time the temperature is 30^oC. **3**

b) Calculate the final pressure of the gas by the time the temperature is 30^oC. **3**

c) Explain why it is important that gas canisters (including deodorant cans) do not exceed a particular temperature. **2**

Answers

Vector Diagrams

1a) 17.2 km @ 324

1b) 2.5 ms^{-1}

1c) 1.79 ms^{-1} @ 324

2a) 26.9 N @ 112

2b) 135 ms^{-2}

3ai) 15.6 N

3aii) @ 050

3b) 3.12 ms^{-2}

Gas Laws

*4a) PV = constant so 100 x 40 = **4000**, 110 x 36.4 = **4004,** 120 x 33.3 = **3996**, 130 x 30.8 = **4004***

4b)The temperature is constant meaning the speed of the particles is constant. The volume is decreasing meaning the area will decrease. The particles will therefore hit the sides of the balloon more frequently, causing a larger overall force. As P = F/A, and force is increased and area is decreased, then pressure must increase.

*5a) P/T = constant so 100/293 = **0.34**, 105/308 = **0.34**, 110/322 = **0.34**, 115/337 = **0.34***

5b)The volume of the container remains constant meaning the area remains constant. The temperature of the gas increases meaning the speed of the particles increases. This means they hit the walls of the container more frequently so the total force will increase. As P=F/A and the force has increased but the area is constant then the pressure must increase.

*6a) V/T = constant so 500/373 = **1.34**, 472/353 = **1.34**, 446/333 = **1.34**, 420/313 = **1.34**, 393/293 = **1.34***

6b)The pressure of the gas remains constant. The temperature of the gas decreases meaning the particles have less speed. This means the force of the particles on the walls is less. As P=F/A and P is constant but F has decreased then the area must also decrease meaning the volume will have decreased.

Reflection of Sound

7a) 255 m

7b) Longitudinal

7c) Longitudinal means the particles vibrate in the same direction that the wave is travelling, Transverse means the particles vibrate at right angles to the direction of travel.

8a) 7 seconds

8b)The distance and speed of the sound in air is still the same, so due to d=vt then the time will still be the same.

9a) 1500 ms^{-1}

9b) 2700 m

9c) 0.06 m

Transistors

10a) 2V

10b)As the light level decreases the resistance of the LDR increases. If this causes the voltage across the transistor to be more than 2 V then it switches on. This allows a current to pass through the transistor, which will then operate the electric curtains.

11a) 1 V

11b)As the temperature increases the resistance of the thermistor decreases. If this causes the voltage across the transistor to be more than 0.7 V then it switches on. This allows a current to pass through the transistor, which will turn on the fan.

12a) 0.9 V

12b)As the temperature decreases the resistance of the thermistor increases. If this causes the voltage across the transistor to be more than 0.7 V then it switches on. This allows a current to pass through the transistor, which will close the relay switch and therefore turn on the heater.

Half-Life Graphs

13a) 1.4 s

13b) 18 minutes

13c) 0.8 thousand years

Projectiles

14a) 100 m

14b) 39.2 ms^{-1}

14c)

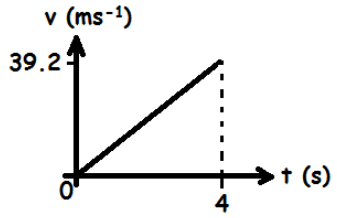

14d) Area under graph = 78.4 m

15a) 27 m

15b) 26.5 ms^{-1}

15c)Same time as the acceleration due to gravity is still the same (9.8 ms^{-2}).

16a) 6 m

16b) 11.8 ms^{-1}

16c)

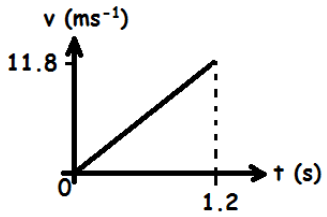

16d) Area under the graph = 14.2 m

Resistor Ratios

17a) 46 V

17b) 66.7 Ω

17c) 3.45 A

17d)The current would decrease as the total resistance in the circuit has increased.

18a) 7.5 V

18b)As the temperature of the thermistor increases the resistance decreases. This means it will get a smaller share of the voltage so the resistor will get a larger share of the voltage.

19a) 3 V

19b)As the light level across the LDR decreases the resistance increases. This means the LDR will get a larger share of the voltage and also that the total current in the circuit will now be less. This means the power of the LED will be less as P=IV so it is less bright.

Heat Energy

20a) 3150 J

20b) 46800 J (if 0.1 kg of solid ice cream is left then 0.2 kg melted. The mass that ***changed*** *state is the one you use in* $E_H = ml$*)*

21a) 188000 J

21b) 791000 J

22a) 66000 J

22b) 1.53×10^5 *Pa*

22c) If the temperature increases too much then the pressure inside would become too much and the canister may explode.